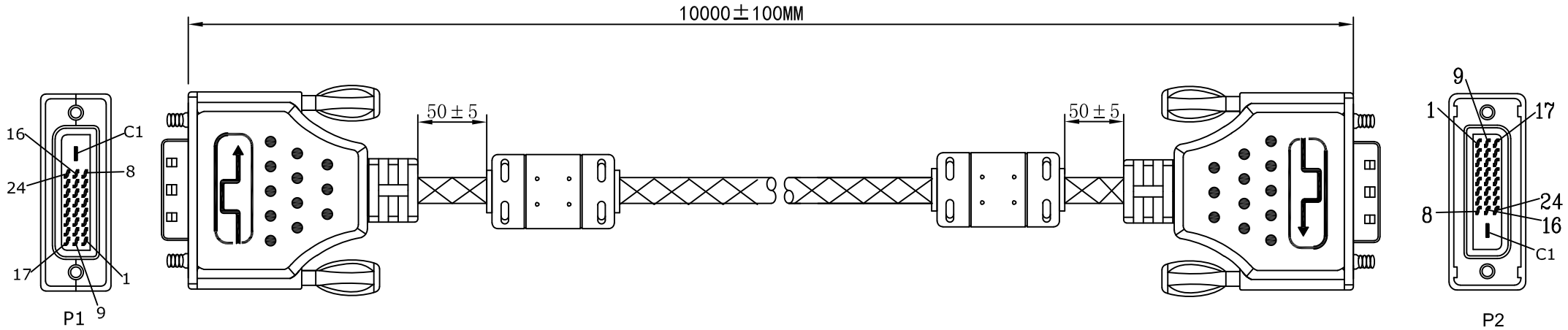

ELECTRICAL TEST:

1.100% OPEN SHORT & MIS WIRE TEST
2.CONTACT RESISTANCE:5 OHM(MAX)
3.INSULATION RESISTANCE:10M OHM(MIN)
4.Insulation voltage:DC 300V/10ms

PIN Assignment

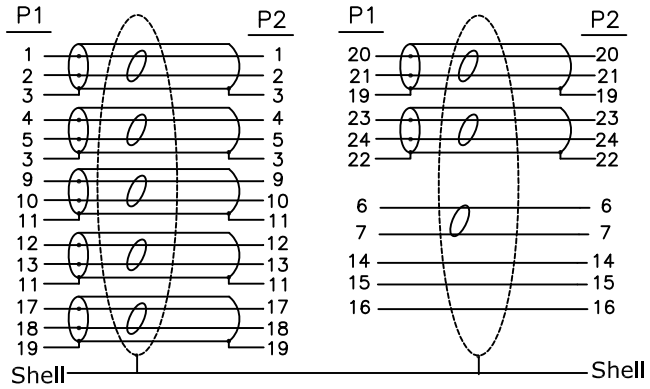

NO	DESCRIPTION	Q'TY	UNIT
9	W:22mm Copper	0.24	M
8	Magnet ring 28.5*17.5*10.5MM	2	pcs
7	DVI 24# AL Shell 2	2	pcs
6	DVI 24# AL Shell 1	2	pcs
5	Screw #4-40UNC 4*38.5	4	pcs
4	45P Black PVC	40	g
3	Transparent PE	6	g
2	DVI(24+1) M SOLDER TYPE,GOLD PLATED,BLACK INSULATION	2	pcs
1	UL20276 (28AWG*1PR+EAM)*7C+28AWG*1PR+28AWG*3C+AEB(50%AL) OD:8.5MM Black	10	M

	TOLERANCE INCHES	M/M
.X	.015	.30
.XX	.010	.10
.XXX	.005	.05

DRAWN BY

CHECK BY

APPD BY

SECOMP

TITLE: ROLINE GOLD DVI CABLE, 10M

CUSTOMER P/N: 11.04.5518

SCALE NONE

UNIT MM

DATE 2022.12.03

DRAWING NO: CA1790190

REV A0

1/1